GIRDER DIAGONAL LINK MOD

Bulletin no. 13413-1
New: October 27, 2002
Rev. 0

United States Patent [19]

Long, Jr.

US005385249A

[11] Patent Number: 5,385,249

[45] Date of Patent: Jan. 31, 1995

[54] MATERIAL HANDLING MACHINE WITH FORCE-ISOLATING SUPPORT LINK

[75] Inventor: Herbert D. Long, Jr., West Allis, Wis

[73] Assignee: Harnischfeger Corporation, Brookfield, Wis

[21] Appl. No.: 98,122

[22] Filed: Jul. 27, 1993

[51] Int. Cl.[5] B66C 19/00

[52] U.S. Cl. 212/218; 104/126; 212/219

[58] Field of Search 212/205, 218, 219, 220, 212/221, 142.1, 140, 141, 142; 104/95, 126

[56] References Cited

U.S. PATENT DOCUMENTS

849,821	11/1895	Fryer	104/95
945,751	1/1910	Butler	104/95
1,138,697	5/1915	Smith	104/95
1,142,126	6/1915	Smith	104/95
4,471,667	5/1984	Forchee	104/95
5,022,542	6/1991	Beier	212/219

FOREIGN PATENT DOCUMENTS

691385 10/1979 U.S.S.R. 212/219

Primary Examiner—Michael S. Huppert
Assistant Examiner—Thomas J. Brahan
Attorney, Agent, or Firm—Jansson & Shupe, Ltd

[57] ABSTRACT

The disclosure involves a material handling machine such as a lattice-type portal crane having an elongate lattice girder suspended from a girder beam by a first and second support links. In turn, the girder beam is supported at an elevation by a pair of legs. The improvement comprises a force transfer link coupling the support links so that forces transferred between the girder beam and either leg are isolated from the girder. The girder, which is triangular-shaped, has a top apex like chord member and a pair of lower chord members. The support links and the force transfer link support the girder at the lower chord members and the top chord member is spaced (and therefore, isolated) from the girder beam.

9 Claims, 6 Drawing Sheets

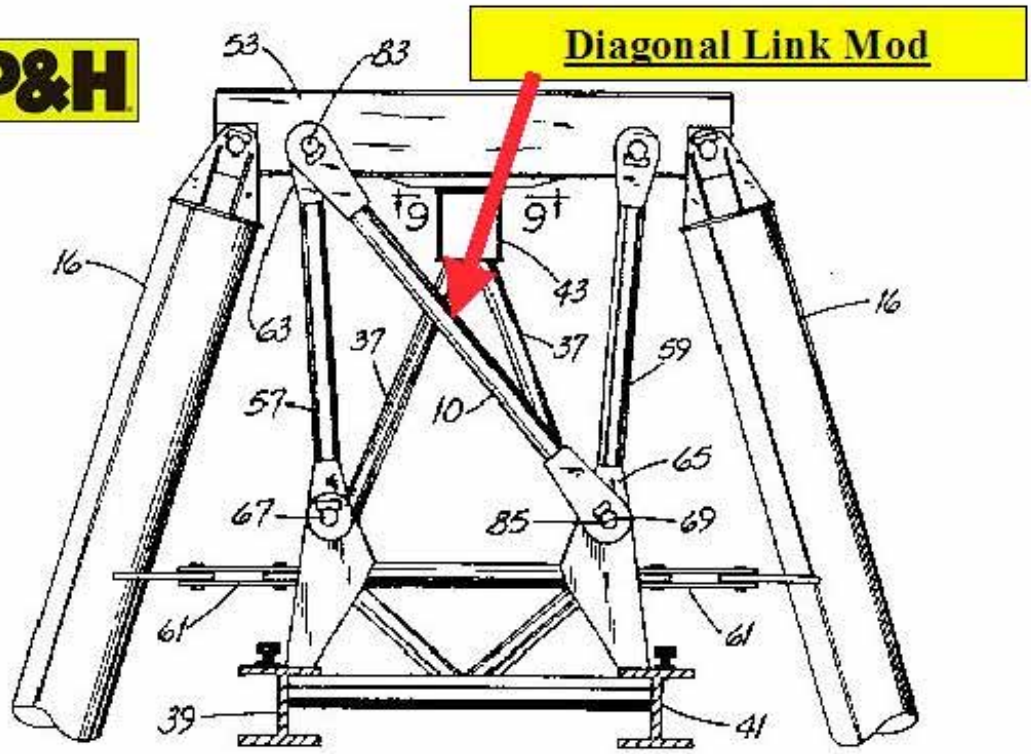

BENEFITS

- Reduced girder stresses
- Longer structural life
- Easy to install
- Eliminates retainer plate wear

FEATURES

- Patented design
- All welds visible
- Kit includes new longer pins
- Pin connected
- Simple but effective design

TECHNICAL DATA SHEET
DIAGONAL LINK MOD
PORTAL CRANE

For further details contact

Morris Material Handling
Phone 800-933-2313
www.morriscranes.com